Strong Lumio

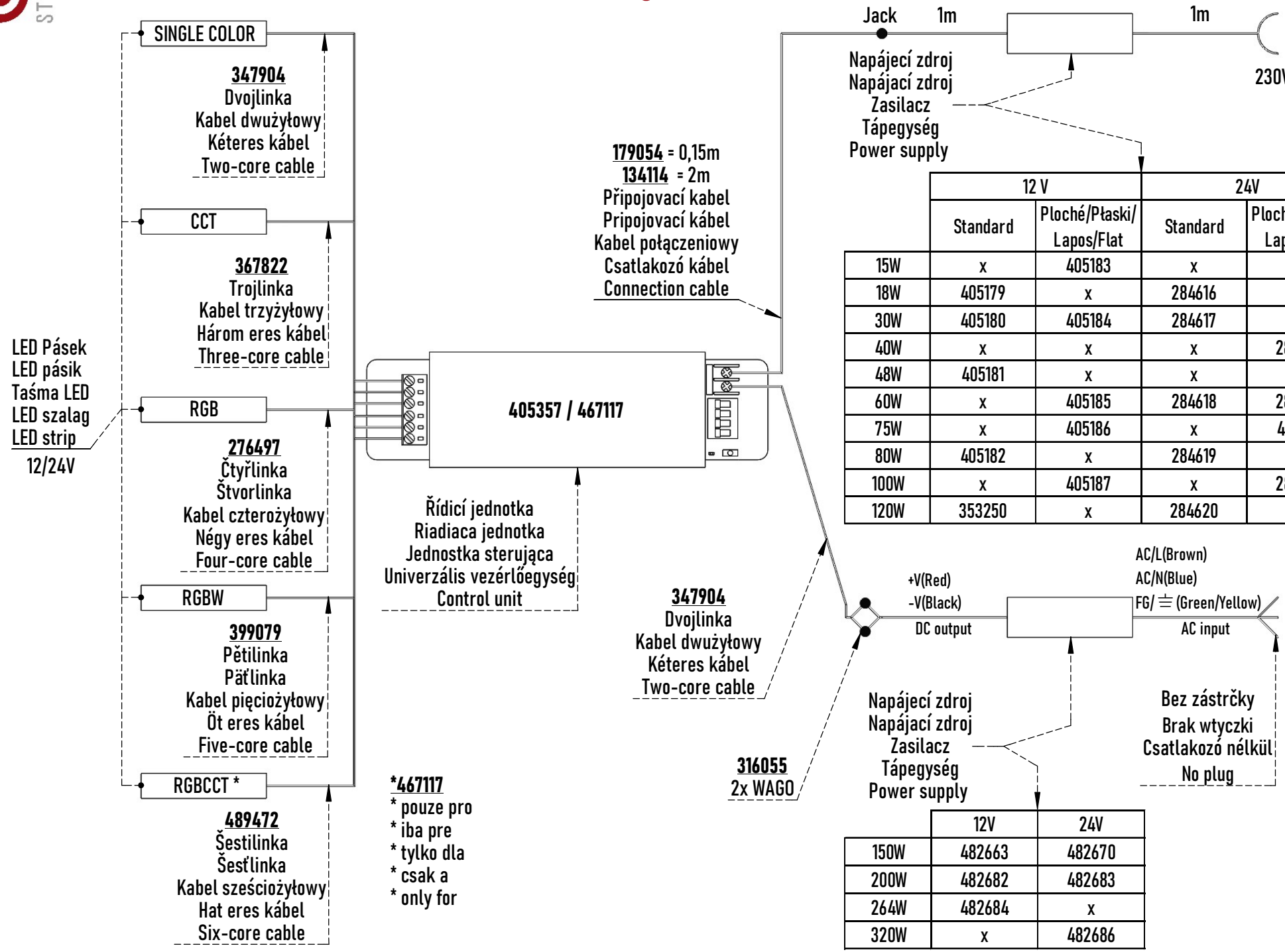

	12 V		24V	
	Standard	Ploché/Płaski/ Lapos/Flat	Standard	Ploché/Płaski/ Lapos/Flat
15W	x	405183	x	x
18W	405179	x	284616	x
30W	405180	405184	284617	x
40W	x	x	x	284622
48W	405181	x	x	x
60W	x	405185	284618	284623
75W	x	405186	x	405188
80W	405182	x	284619	x
100W	x	405187	x	284624
120W	353250	x	284620	x

	12V	24V
150W	482663	482670
200W	482682	482683
264W	482684	x
320W	x	482686